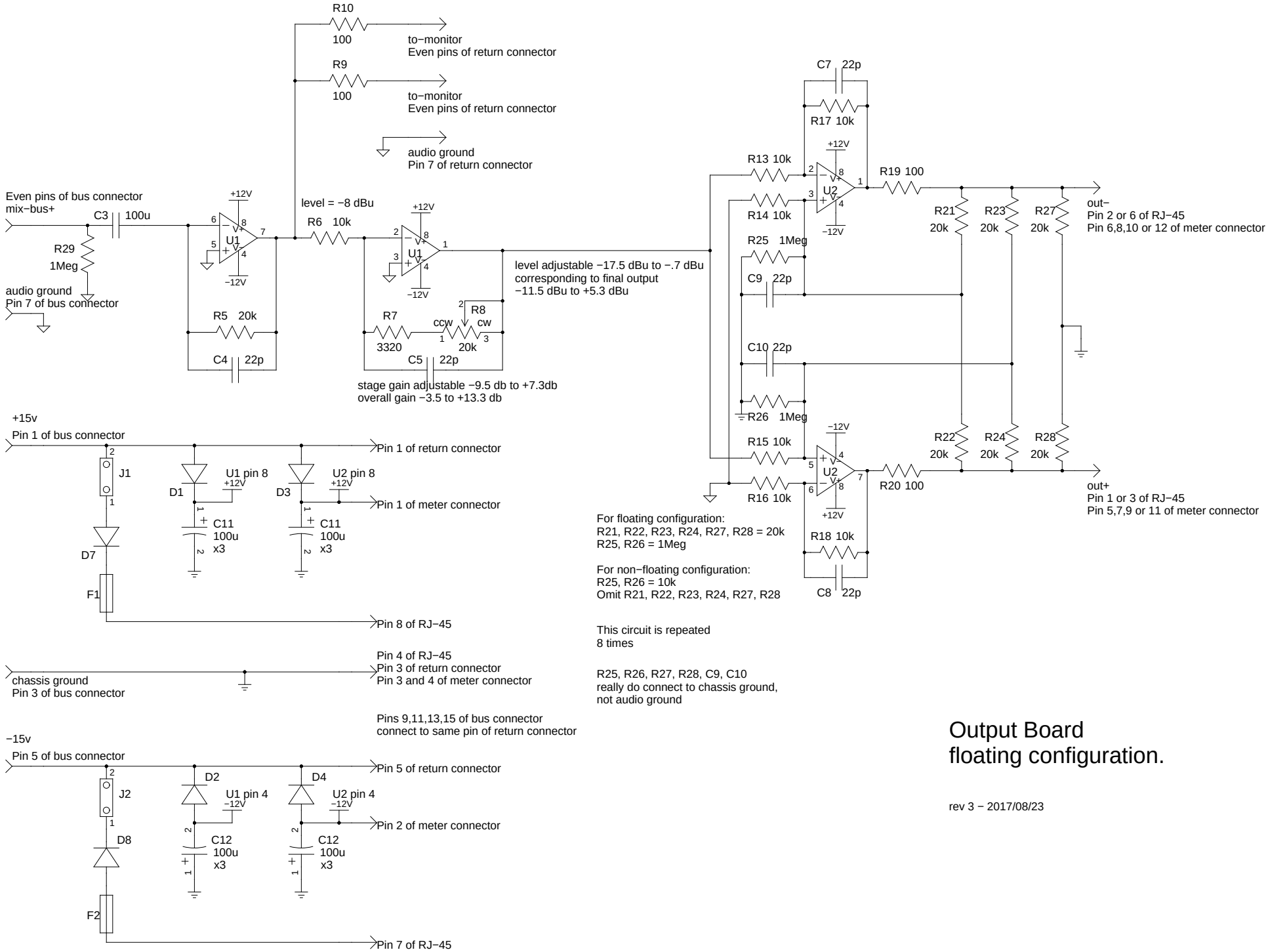

For floating configuration:
R21, R22, R23, R24, R27, R28 = 20k
R25, R26 = 1Meg

For non−floating configuration:
R25, R26 = 10k
Omit R21, R22, R23, R24, R27, R28

This circuit is repeated
8 times

R25, R26, R27, R28, C9, C10
really do connect to chassis ground,
not audio ground

Output Board
floating configuration.

rev 3 − 2017/08/23